Euri Lighting

50W REPLACEMENT

LED EP20-5020*ew*

2700K CCT

Part #: EBPAR20DM/B/8.5W/550/40D/27K/E26/E **Bulb Class:** PAR20

Product Description

LED EP20-5020*ew* delivers superior brightness, valuable energy savings and long lasting performance. This PAR20 LED bulb is ideal for ambient lighting or general purpose applications due to its uniform *warm white light (2700K) and replaces conventional 50 Watt incandescent light bulbs.
Enjoy features such as: instant on, dimming options, shatter resistance and mercury free.

Estimated Energy Cost: $1.02 per year

***Note:** Design, features and specifications subject to change without notice. Some features may not be available on all models.
For more information regarding dimmer compatibility please visit: www.eurilighting.com or call 1-888-743-5766

Specifications

Input Power	Input Voltage	Lumen Output	Beam Angle	Center Beam	CCT
8.5 W	120V/60Hz	550 lm	40°	1034 cd	2700 K

CRI	Luminous Efficacy	Power Factor	Input Current	Base/Cap	Lamp Lifespan
90+	64 lm/W	0.8	0.07 A	E26	25,000 Hrs.

Product Features

- Dimmable
- Instant-On/Off
- Mercury Free
- Wet Rated

Product Dimensions

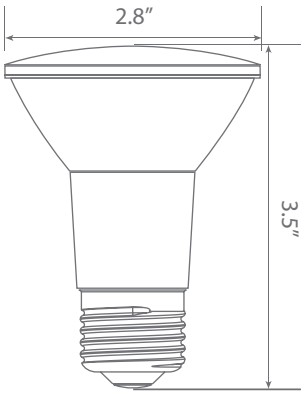

Product Photometric Data

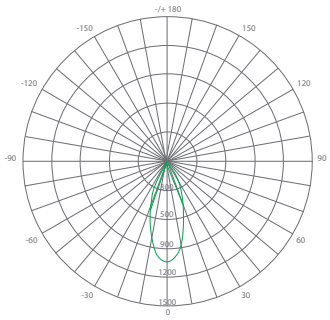

Euri Lighting | A Division of *IRTRONIX* Inc.
20900 Normandie Avenue Bldg. B, Torrance, CA 90502 | Tel: 888.743.5766 | Fax: 310.787.1166 | www.eurilighting.com
©2018 Euri Lighting. All Rights Reserved