Euri Lighting

INSTALLATION GUIDE
MODEL #: ET8-1141 / ET8-1151

Linear Series | T8 Class
4 ft. LED Tube

This LED tube is intended to replace fluorescent tube lamps with an ANSI designation 32W/48T8

Questions?

For customer service please call us at 1-888-743-5766
Office Hours: 8:00 a.m. – 5:00 p.m. PST Monday-Friday

LED Tube
Plug & Play

PLEASE REVIEW THE INSTRUCTIONS AND WARNINGS LISTED BELOW PRIOR TO PROPER INSTALLATION

WARNINGS - Risk of fire / electrical shock

- LED Retrofit Kit installation requires knowledge of luminaires electrical systems. If not qualified, do not attempt installation. Contact a qualified electrician.
- Do not make or alter any open holes in an enclosure of wiring or electrical components during installation.
- If lamp or luminaire exhibits abnormal operation (buzzing, flickering, minimal light, etc.), turn off power, remove lamp and contact us. For more information please visit www.eurilighting.com or call our toll-free number 1-888-743-5766.
- To avoid potential fire or shock hazard, do not use this retrofit kit in luminaires employing shunted bi-pin lampholders. Note: Shunted lamp holders are found only in fluorescent luminaires with Instant-Start ballasts. Instant-start ballasts can be identified by the words “Instant Start” or “I.S.” marked on the ballast. This designation may be in the form of a statement pertaining to the ballast itself, or may be combined with the marking for the lamps with which the ballast is intended to be used, for example F40T12/IS.
- Installers should not disconnect existing wires from lampholder terminals to make new connections at lampholder terminals. Instead installers should cut existing lampholder leads away from the lampholder and make new electrical connections to lampholder lead wires by employing applicable connectors.

(FOR CUL ONLY) THIS RETROFIT KIT IS ACCEPTED AS A COMPONENT OF A LUMINAIRE WHERE THE SUITABILITY OF THE COMBINATION SHALL BE DETERMINED BY AUTHORITIES HAVING JURISDICTION.

DIRECT REPLACEMENT INSTALLATION INSTRUCTIONS

1. Turn-off power before installation | 2. Replace traditional fluorescent tube with LED tube | 3.Turn-on power and enjoy your new LED Tube.

STEP 1

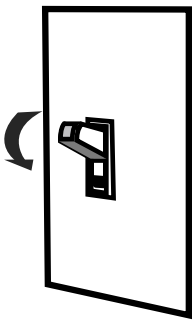

STEP 2

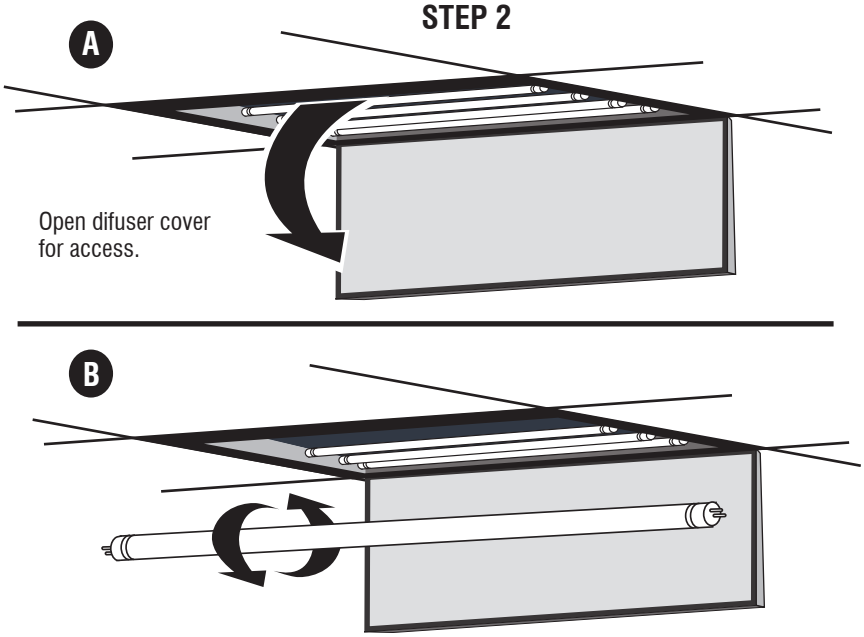

Rotate fluorescent tube to remove then insert new LED tube and rotate to lock into place.
Repeat sequence for each tube. Close cover when complete.

STEP 3

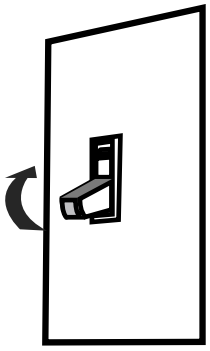

RE-LAMPING

Please apply the following lamp replacement label on the retrofit luminaire after the retrofit kit has been installed, where readily visible by the user during re-lamping and after installation.

THIS PRODUCT MAY NOT BE COMPATIBLE WITH ALL BALLASTS, FOR MORE INFORMATION ABOUT BALLAST COMPATIBILITY PLEASE VISIT: WWW.EURILIGHTING.COM

©2016. Euri Lighting | A Division of IRTRONIX Inc. All Rights Reserved